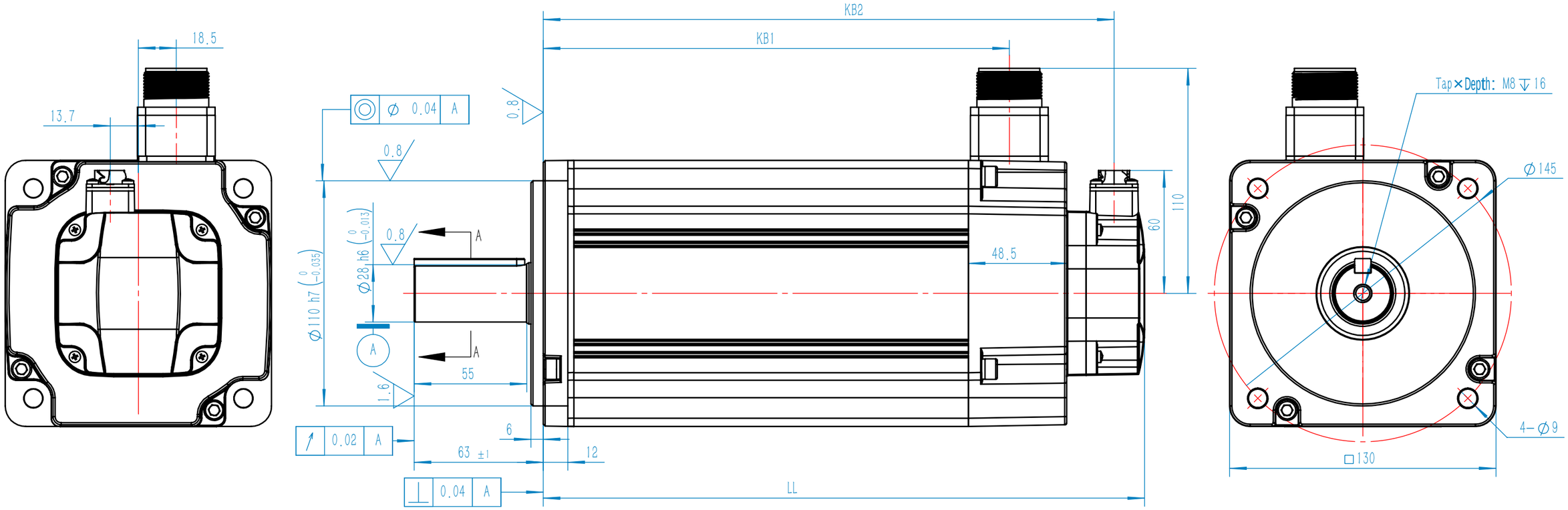

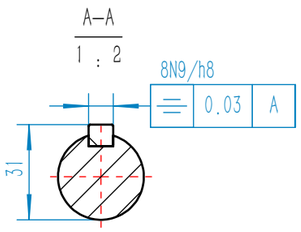

技术说明(Note):
1.带油封电机，油封材质为氟橡胶，正常工作使用要求：压力≤0.04MPa
For mortor with oil seal,oil seal material is fluorine rubber,normal operation requirements:pressure≤0.04MPa

引出线标识 Pin No.	编码器插座引出线定义 (12pin，7A) Encoder connector specification (12pin，7A)	编码器插头 Encoder connector
1	SD+	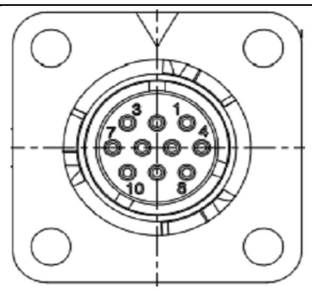
2	SD-	
3	BAT+	
4	BAT-	
5	/	
6	/	
7	Gnd	
8	Vcc	
9	/	
10	FG	

动力线插座引出线定义 (9pin,13A+23A) Power cable connector specification (9pin,13A+23A)	引出线标识 Pin No.	动力线插头 Power cable connector
U	B	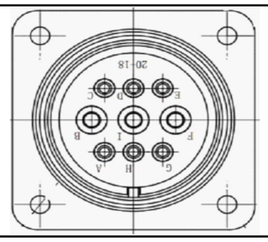
V	I	
W	F	
FG	C	
FG	D	
B1	G	
B2	H	

注：若电机不带制动器，则动力线插座无B1、B2信号
Note:If motor without holding brakes,there is no B1 and B2 signal on the Power cable connector

电机型号 Motor model	编码器类型 Encoder model	电机重量 (Kg) Weight (Kg)	电机本体尺寸 (mm) External dimensions (mm)		
			LL	KB1	KB2
EM3A-30ALA2 3/4 4	L：23位绝对值编码器 L：23 bit absolute encoder	12	226.5	160.5	211.5
EM3A-30DLA2 3/4 4		12	226.5	160.5	211.5
EM3A-40DLA2 3/4 4		14	253.5	187.5	238.5
EM3A-50DLA2 3/4 4		15.5	293.5	227.5	278.5